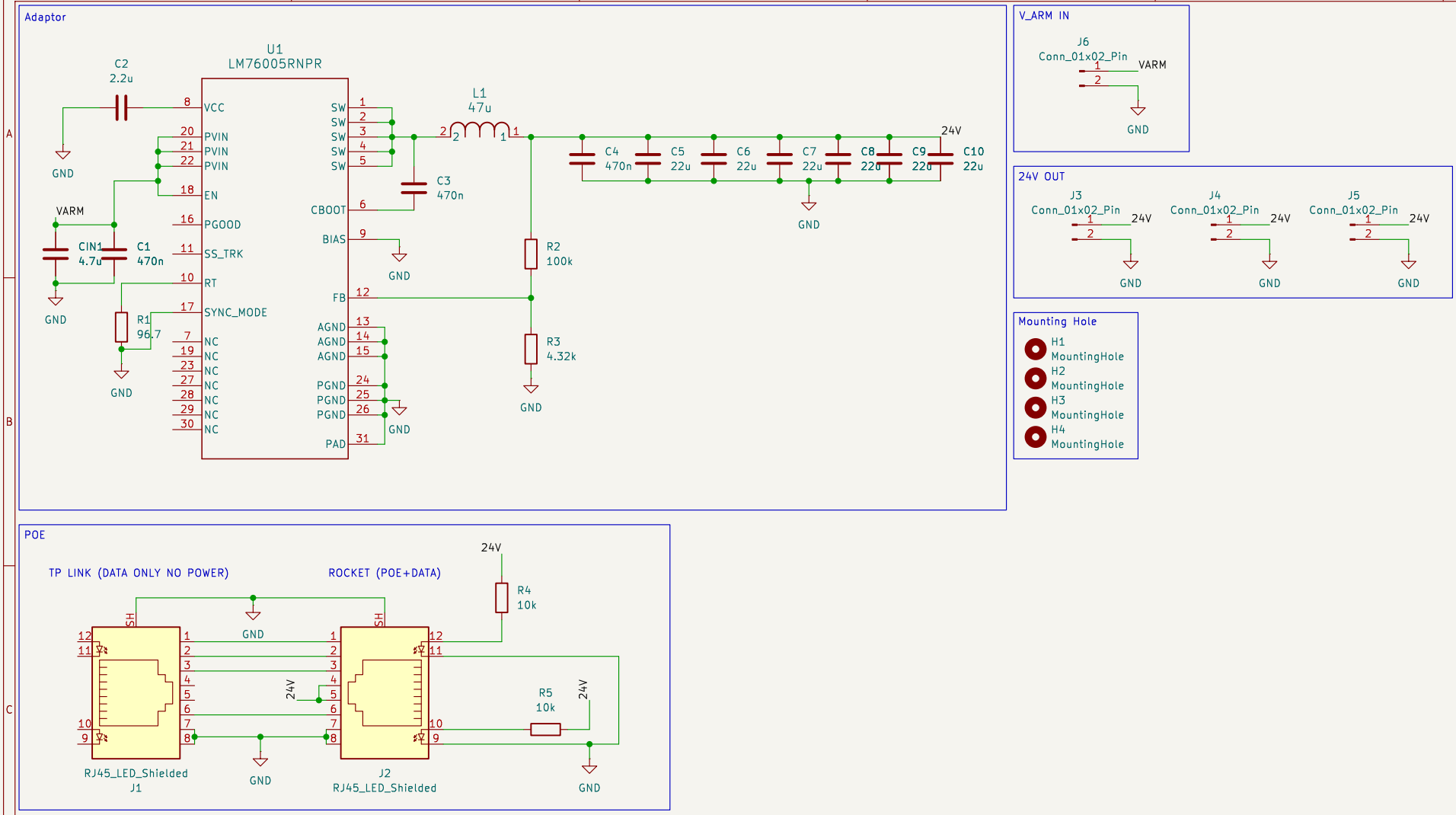

Chin-Sheng Sung
SJSU Robotics

Sheet: /
File: POE.kicad_sch

Title: POE Board

Size: A4	Date: 2024-10-12	**Rev: A**
KiCad E.D.A. 8.99.0-2629-g91569cf3cf		Id: 1/1