CURRENT SENSING

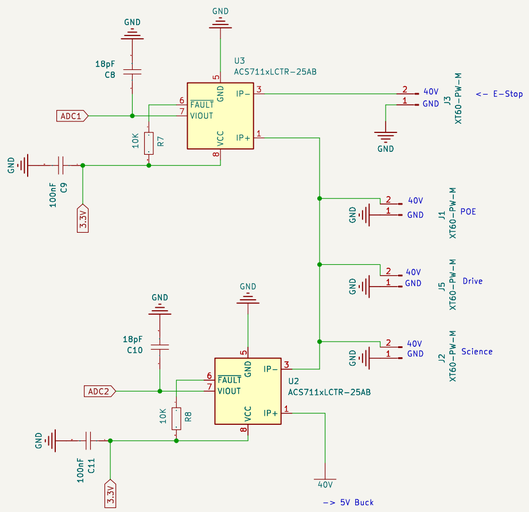

LDO

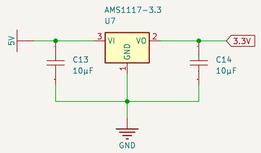

BUCK

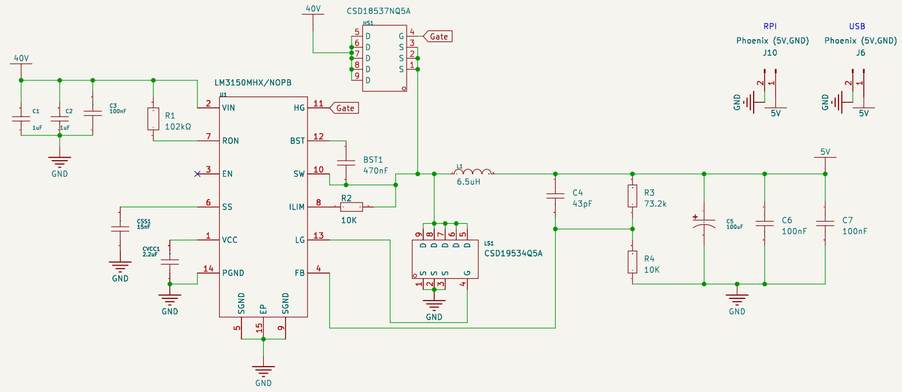

I2C

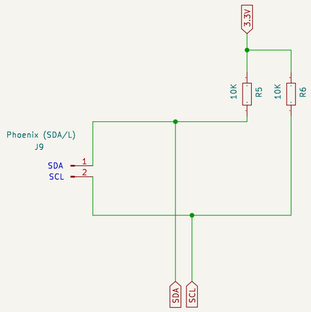

µM

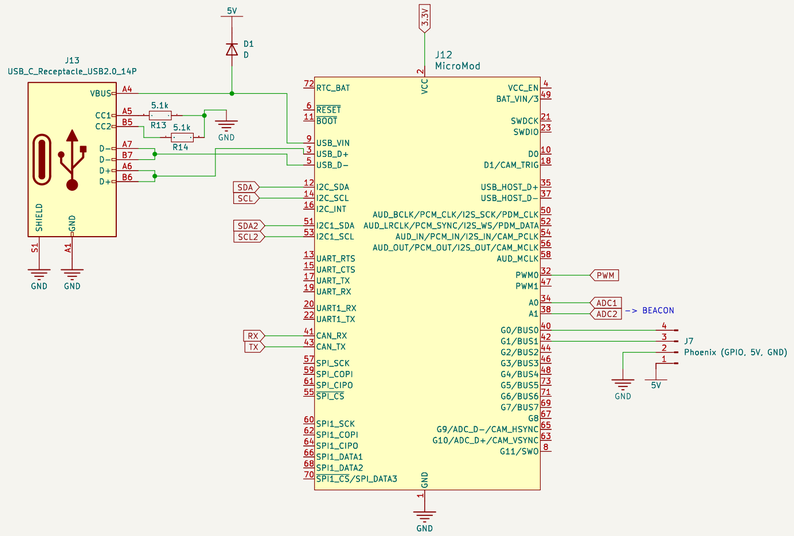

LCD

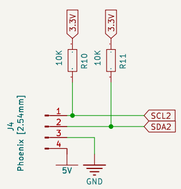

CAN

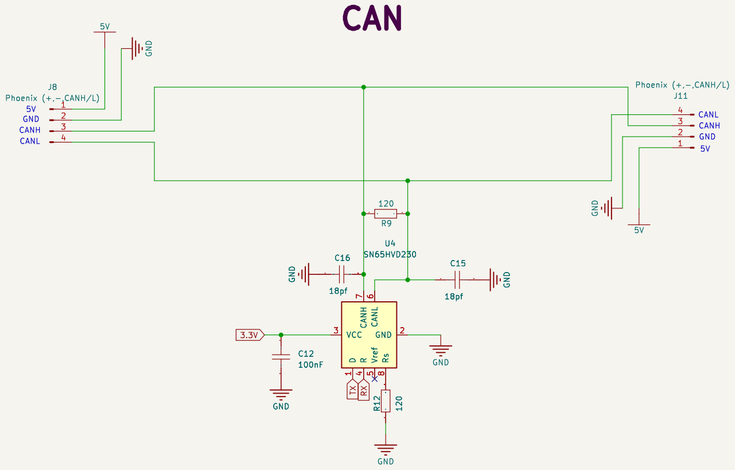

Sheet: /		
File: HUB.kicad_sch		
Title:		
Size: A2	Date:	**Rev:**
KiCad E.D.A. 8.99.0-2629-g91569cf3cf		Id: 1/1